Smun
XIMENG ELECTRIC

Zhejiang Ximeng Electronic Technology Co.,ltd.

500W Single Output Switching Power Supply LRS-500(X) Series



Size：215*115*30mm

Features:

- AC input range selectable by switch
- Built-in EMI filter, tiny ripple
- Protections:short circuit/Overload/Over voltage Over temperature
- Forced air cooling by built-in DC fan
- 43,000 hours of continuous operation at 25 ℃
- 100% full load burn-in test
- LED indicator for power on
- Compliance to IEC/EN60335-1 (PD3) and IEC/EN61558-1,2-16 suitable for home appliance
- 3 years warranty

SPECIFICATION

ISO9001:4008

Model		LRS-500-12	LRS-500-15	LRS-500-24	LRS-500-36	LRS-500-48
OUTPUT	DC VOLTAGE	12V	15V	24V	36V	48V
	RATED CURRENT	41.7A	33.4A	21A	14A	10.5A
	CURRENT RANGE	0 ~ 41.7A	0~33.4A	0 ~ 21A	0 ~ 14A	0 ~ 10.5A
	RATED POWER	500.4W	501W	504W	504W	504W
	RIPPLE NOISE(Max)	150mVp-p	150mVp-p	150mVp-p	200mVp-p	200mVp-p
	VOLTAGE ADJ.RANGE	10.5 ~ 13.8V	13.5~18V	21.6 ~ 26.4V	32.4 ~ 39.6V	43.2 ~ 52.8V
	VOLTAGE TOLERANCE	±1.5%	±1.0%	±1.0%	±1.0%	±1.0%
	LINE REGULATION	±0.5%	±0.5%	±0.5%	±0.5%	±0.5%
	LOAD REGULATION	±1.0%	±0.5%	±0.5%	±0.5%	±0.5%
	SETUP,RISE TIME	1500ms, 50ms/230VAC 1500ms, 50ms/115VAC(full load)				
	HOLD UP TIME (Typ.)	16ms/230VAC 12ms/115VAC (full load)				
INPUT	VOLTAGE RANGE	85 ~ 132VAC/ 170 ~ 264VDC by switch 240~370VDC (switch on 230VAC)				
	FREQUENCY RANGE	47 ~ 63Hz				
	EFFICIENCY(Typ.)	85%	86%	87%	88%	89%
	AC CURRENT(Typ.)	7.6A/115VAC 3.8A/230VAC				
	INRUSH CURRENT(Typ.)	COLD START: 60A/115VAC 60A/230VAC				
	LEAKAGE CURRENT	<2mA / 240VAC				
PROTECTION	OVERLOAD	110~ 140% rated output power 12~36V Hiccup mode, recovers automatically after fault condition is removed.				
	OVER VOLTAGE	13.8~16.2V	18.75~21.75V	28.8~33.6V	41.4~48.6V	55.2~64.8V
		Protection type Shut down o/p voltage, re-power on to recover				
ENVIRONMENT	WORKING TEMP.	-20 ~ 70℃ (Refer to derating curve)				
	WORKING HUMIDITY	20 ~ 90% RH non-condensing				
	STORAGE TEMP.,HUMIDITY	-45 ~ 85℃, 20% ~ 95% RH non-condensing				
	TEMP.COEFFICIENT	±0.03%/℃ (0 ~ 50℃)				
	VIBRATION	10 ~ 500Hz, 2G 10 min/1cycle,60min.each X Y Z axes				
SAFETY	SAFETY STANDARDS	EN62368-1,EN60335-1和GB4943.1 APPROVED				
	WITHSTAND VOLTAGE	I/P-O/P:2KVAC I/P-FG:2KVAC O/P-FG:0.5KVAC				
	ISOLATION RESISTANCE	I/P-O/P, I/P-FG, O/P-FG:100M Ohms / 500VDC / 25℃/70%RH				
	EMC EMISSION	Compliance to EN61000-3-2 2014/EN61000-3-3 2013				
	EMC IMMUNITY	Compliance to EN 55032 2015/EN55035 2017/60950-1				
OTHERS	MTBF	≥347.5K hrs MIL-HDBK-217F(25℃)				
	DIMENSION	215*115*30mm (L W H)				
	PACKING	0.8Kg; 15pcs/13Kg/0.78CUFT				
NOTE	1. All parameters NOT specially mentioned are measured at 230VAC input,rated load and 25 of ambient temperature. 2. Ripple noise are measured at 20MHz of bandwidth by using a 12 twisted pair -wire terminated with a 0.1uf and 47uf parallel capacitors. 3. Tolerance includes set up tolerance,line regulation and load regulation. 4. Derating output is required under low input voltage. Please refer to the derating curve for details. 5. The power supply should be considered as a part of the components in the system. All EMC tests will test the test samples on a metal iron plate with a thickness of 1mm, a length of 360mm width of 360mm.					

Http://www.smun.com TEL:0577- 62657774

500W Single Output Switching Power Supply LRS-500(X) Series

Mechanical Specification

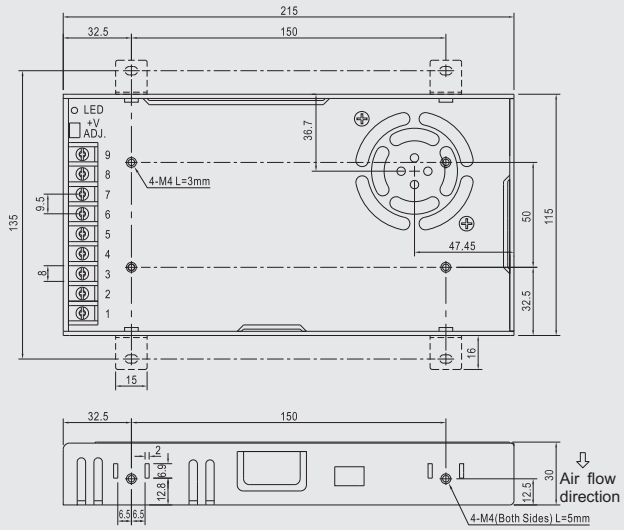

Terminal Pin No.Assignment:

Pin No.	Assigment	Pin No.	Assigment
1	AC/L	4-6	DC OUTPUT -V
2	AC/N	7-9	DC OUTPUT +V
3	FG ⏚		

Block Diagram

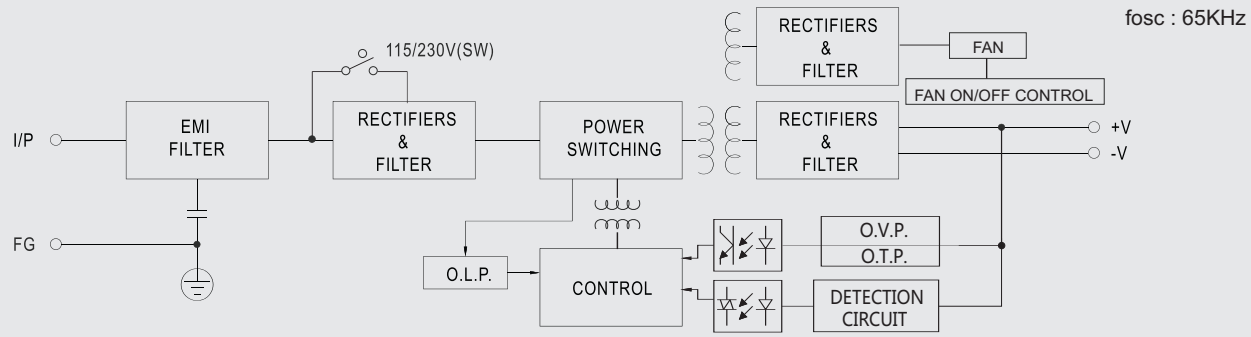

Derating Curve

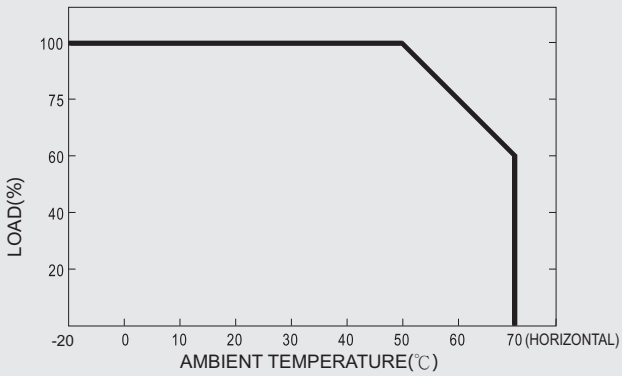

Static Characteristic

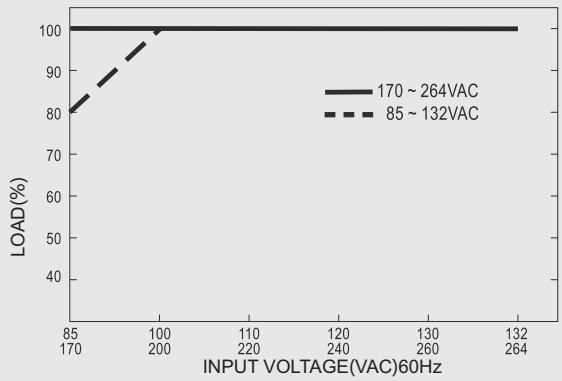

Http://www.smun.com TEL:0577- 62657774